Code article 86.D060.4323.01

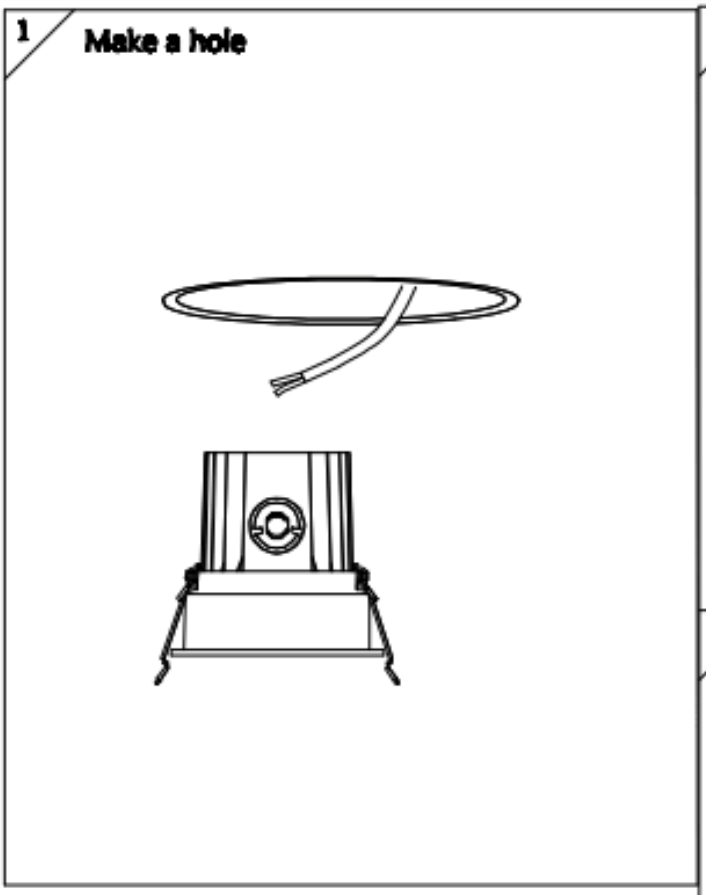

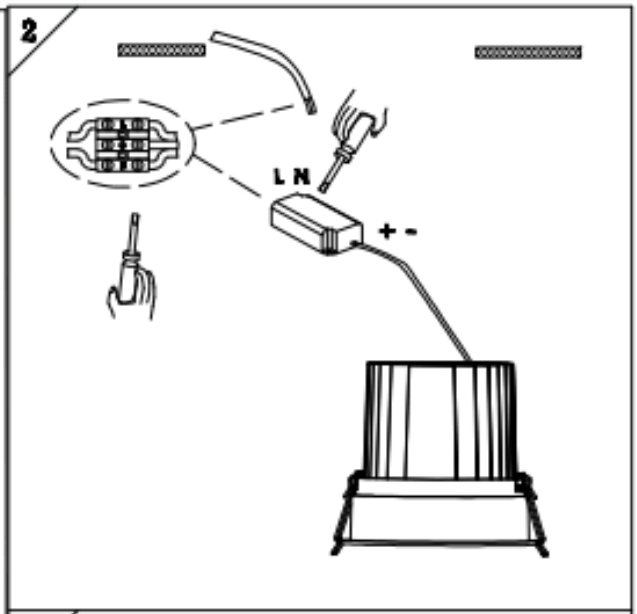

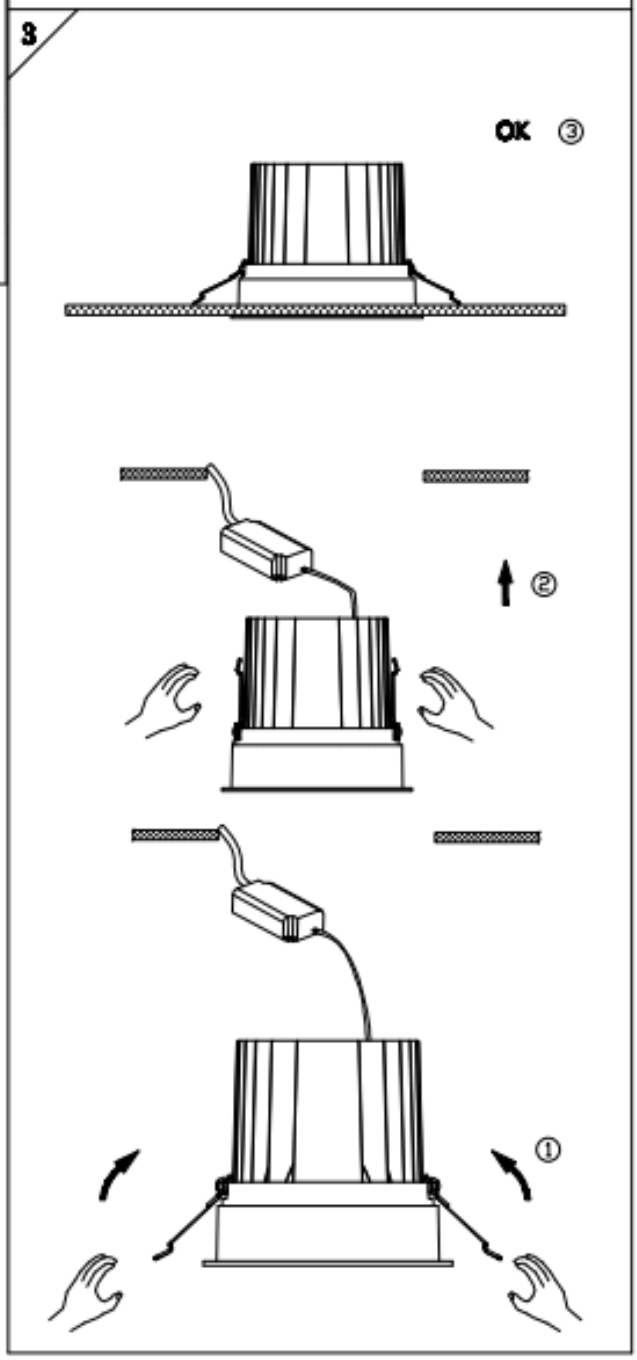

Cut out in the right size:

86.D060.1***.** 85mm
86.D060.2***.** 108mm
86.D060.3***.** 140mm
86.D060.4***.** 170mm